PEFY

PEFY-P40,50,63,71,80,100,125,140VMH-E

Unit : mm

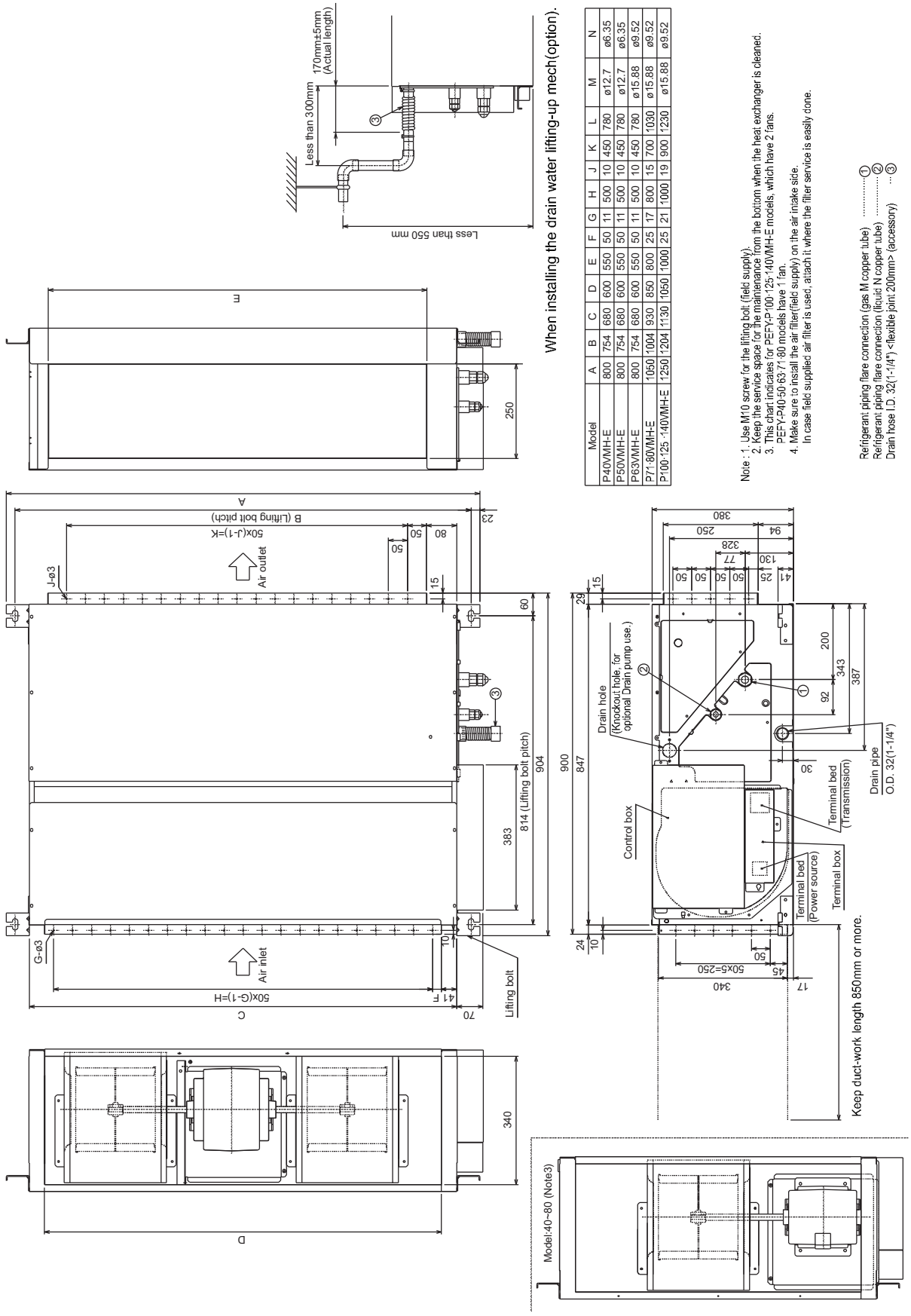

Model	A	B	C	D	E	F	G	H	J	K	L	M	N
P40VMH-E	800	754	680	600	550	50	11	500	10	450	780	ø12.7	ø6.35
P50VMH-E	800	754	680	600	550	50	11	500	10	450	780	ø12.7	ø6.35
P63VMH-E	800	754	680	600	550	50	11	500	10	450	780	ø15.88	ø9.52
P71~80VMH-E	1050	1004	930	850	800	25	17	800	15	700	1030	ø15.88	ø9.52
P100~125~140VMH-E	1250	1204	1130	1050	1000	25	21	1000	19	900	1230	ø15.88	ø9.52

Note : 1. Use M10 screw for the lifting bolt (field supply).
2. Keep the service space for the maintenance from the bottom when the heat exchanger is cleaned.
3. This chart indicates for PEFY-P100~125~140VMH-E models, which have 2 fans. PEFY-P40~50~63~71~80 models have 1 fan.
4. Make sure to insiall the air filter(field supply) on the air intake side. In case field supplied air filter is used, attach it where the filter service is easily done.

Refrigerant piping flare connection (gas M copper tube) ……①
Refrigerant piping flare connection (liquid N copper tube) ……②
Drain hose I.D. 32(1-1/4") <flexible joint 200mm> (accessory) …③

PEFY-P200, 250VMH-E

Unit : mm

Note : 1. Use M10 screw for the lifting bolt (field supply).
2. Keep the service space for the maintenance from the bottom when the heat exchanger is cleaned.
3. Make sure to install the air filter(field supply)on the air intake side. In case field supplied air filter is used, attach it where the filter service is easily done.

Model	A	B
P200VMH-E	ø19.05	ø9.52
P250VMH-E	ø22.2	ø9.52

① .... Refrigerant piping brazing connection (gas A copper tube)
② .... Refrigerant piping brazing connection (liquid B copper tube)
③ .... Drain hose I.D. 32 (1-1/4") <flexible joint 200mm>(accessory)

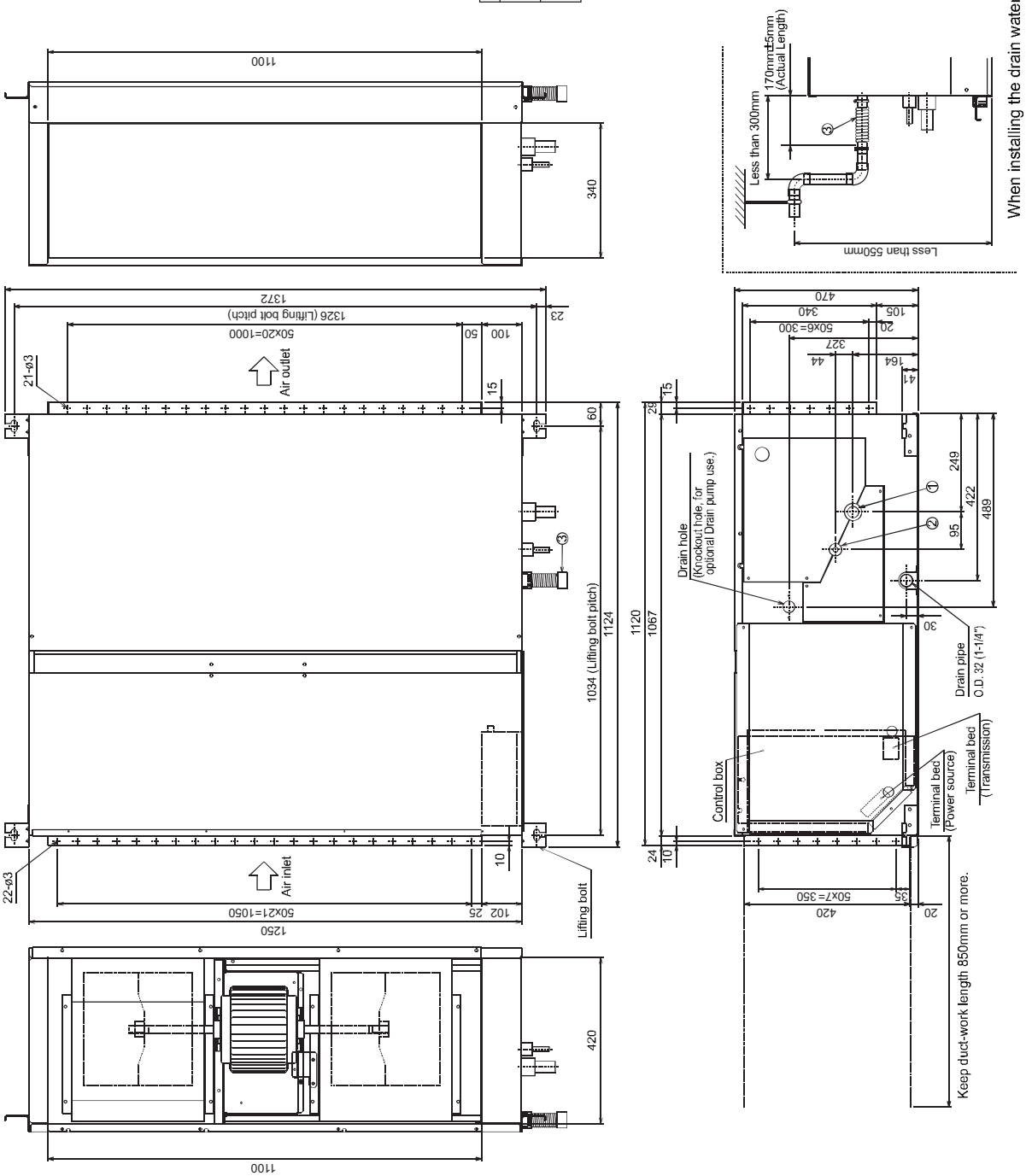

PEFY

PEFY-P200,P250VMHS-E
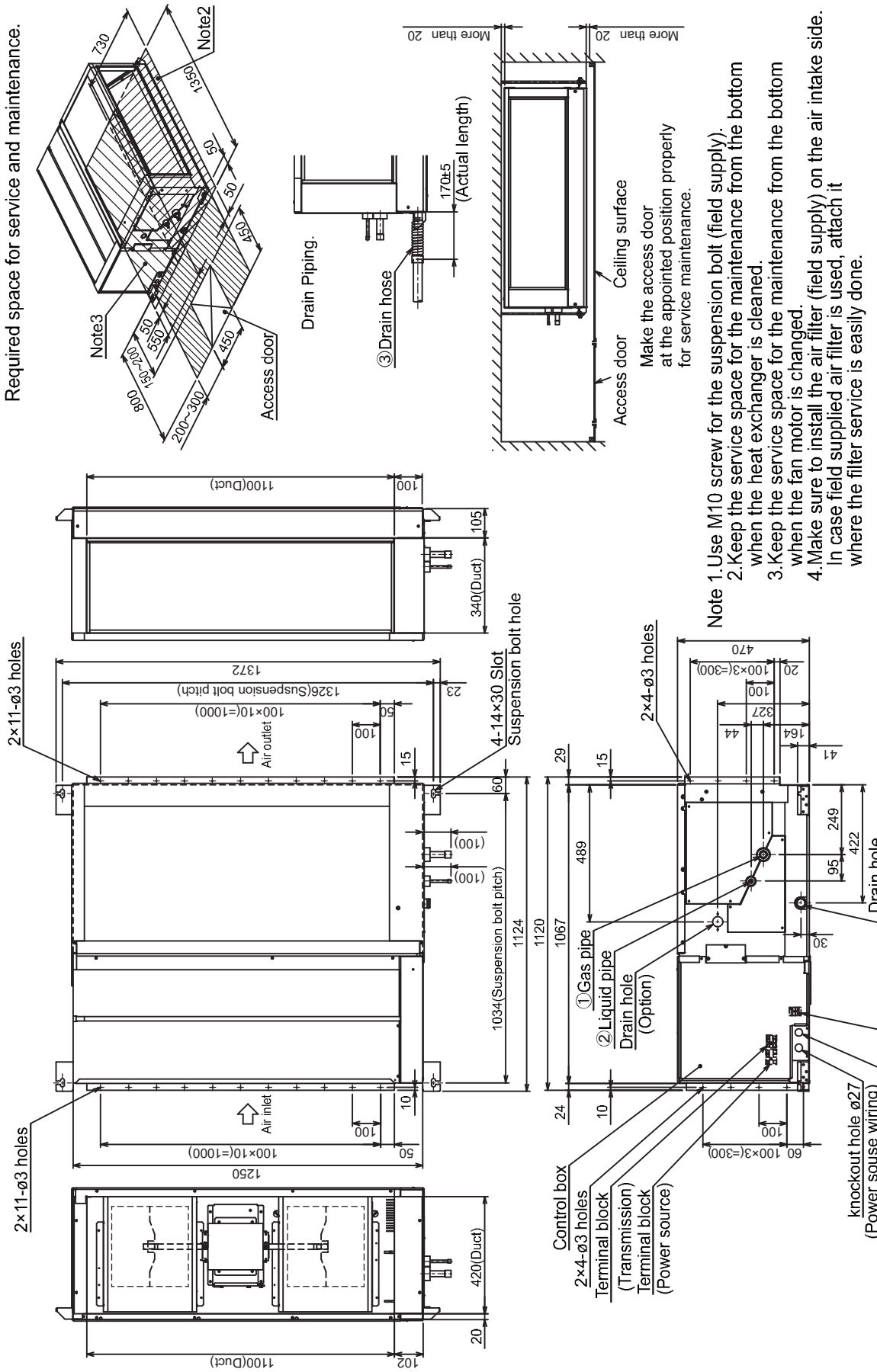
Unit : mm